MURR ELEKTRONIK
stay connected

Valve plug MSC SuperSeal female with cable

PUR 3x0.75 bk 7,5m

Xtreme - Outdoor
Male straight
max. 24 V DC
3-pole
without components
without cable sleeves
Plastic housings with good resistance against chemicals and oils.
The resistance to aggressive media should be individually tested for your application. Further details on request.
Further cable lengths on request.

Odkaz k produktu

Obrázky

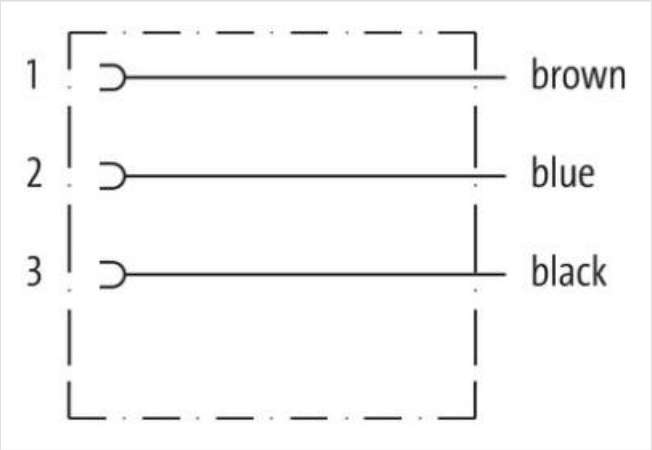

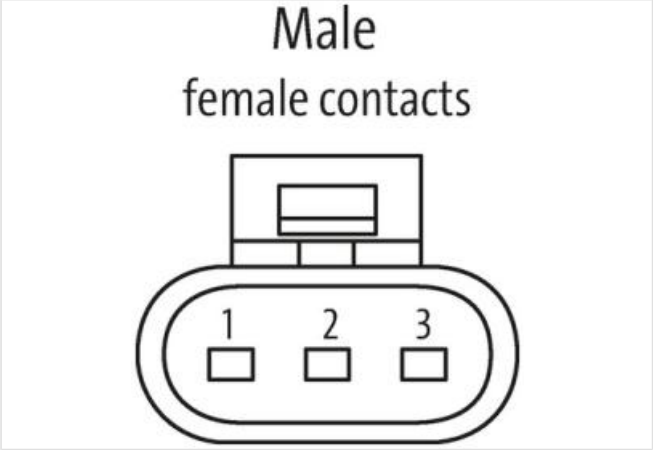

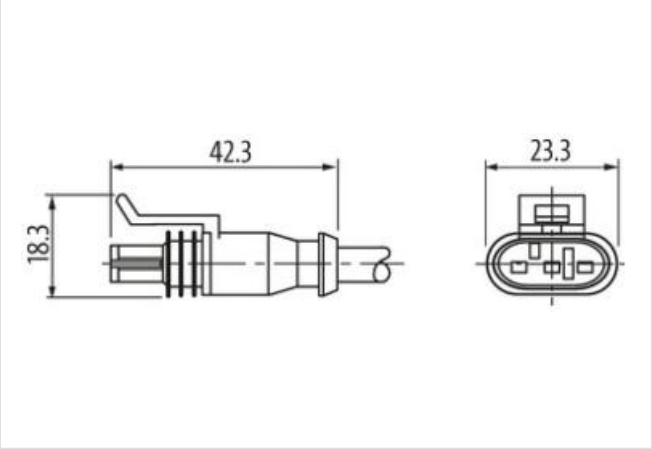

Výrobok sa môže líšiť od zobrazenia

Cable length	7,5 m
Side 1	
Mounting method	inserted
Coating contact	tin-plated
Family construction form	SuperSeal

Informácie v tomto produkte PDF boli zostavené s maximálnou starostlivosťou.
Zodpovednosť sa obmedzuje hrubou nedbanlivosťou vo vzťahu k správnosti, úplnosti a aktuálnosti. Stav: 18.05.2024

suitable for corrugated tube (internal Ø)	11 mm
Material contact	Copper alloy
No. of poles	3
Commercial data	
ECLASS-6.0	27279218
ECLASS-6.1	27279218
ECLASS-7.0	27279218
ECLASS-8.0	27279218
ECLASS-9.0	27060312
ECLASS-10.1	27060312
ECLASS-11.1	27060312
ECLASS-12.0	27060312
ETIM-5.0	EC001855
customs tariff number	85444290
GTIN	4048879682411
Packaging unit	1
Electrical data | Supply	
Operating voltage DC max.	24 V
Current operating per contact max.	8 A
Diagnostics	
Status indication LED	no
Installation | Connection	
Family construction form	AMP SuperSeal 1.5
Device protection | Electrical	
Degree of protection (EN IEC 60529)	IP67
Additional condition protection degree	inserted, locked
Pollution Degree	3
Rated surge voltage	1,5 kV
Additional suppressor	without components
Mechanical data | Material data	
Color housing	black
Material gasket	Silicon
Material housing	Plastic
Material overmolding	PUR
Mechanical data | Mounting data	
Looking techniques	Snap-in connector
Environmental characteristics | Climatic	
Operating temperature min.	-40 °C
Operating temperature max.	125 °C
Additional condition temperature range	depending on cable quality
Important installation notes	
Note on strain relief	Protect the connectors by suitable measures from mechanical loads, e.g. by the usage of cable ties.
Note on bending radius	**Attention:** Observe the permissible bending radii when laying cables, as the IP protection class can be endangered by excessive bending forces.
Installation | Cable	
wire arrangement	brown, blue, black
Cable identification	513
Jacket Color	black
Amount stranding	1
Stranding	3 wires twisted
wire arrangement	brown, blue, black

Informácie v tomto produkte PDF boli zostavené s maximálnou starostlivosťou.
Zodpovednosť sa obmedzuje hrubou nedbanlivosťou vo vzťahu k správnosti, úplnosti a aktuálnosti. Stav: 18.05.2024

Material jacket	PUR
Outer-diameter (jacket)	5,3 mm
Tolerance outer diameter (sheath)	± 5 %
Material wire insulation	PP
Amount wires	3
Conductor crosssection (wire)	0,75 mm²
Current load capacity (standard)	to DIN VDE 0298-4
Current load capacity min. wire	12 A
Min. operating temperature (static)	-40 °C
Max. operating temperature (fixed)	80 °C
Operating temperature min. (dynamic)	-25 °C
Operating temperature max. (dynamic)	80 °C
UV resistance	DIN EN ISO 4892-2 A
Flame resistance	UL 1581 § 1090 | UL 1581 § 1100 FT2 | IEC 60332-2-2
chemical resistance	Good, application-related testing
Gasoline resistance	Good, application-related testing
Oil resistance	Good, application-related testing | DIN EN 60811-404
Bending radius (dynamic)	10 x Outer diameter

Informácie v tomto produkte PDF boli zostavené s maximálnou starostlivosťou.
Zodpovednosť sa obmedzuje hrubou nedbanlivosťou vo vzťahu k správnosti, úplnosti a aktuálnosti. Stav: 18.05.2024